THERMA-TRU® DOORS

Traditions

WOOD EDGE GLAZED STEEL SINGLE DOOR

INSWING/OUTSWING "IMPACT"

L F Schmidt

L. F. SCHMIDT LICENSE No. 43409 STATE OF FLORIDA PROFESSIONAL ENGINEER

Digitally signed by Lyndon F Schmidt
Date: 2026.08.06 12:37:54 -04'00'

This item has been digitally signed and sealed by **L. F. Schmidt, P.E.** on the date adjacent to the seal.

Printed copies of this document are not considered signed and sealed and the signature must be verified on any electronic copies.

THIS PRODUCT APPROVAL IS VALID ONLY FOR THE STATE OF FLORIDA

GENERAL NOTES

1. This product has been evaluated and is in compliance with the 9th Edition (2026) Florida Building Code (FBC) structural requirements excluding the "High Velocity Hurricane Zone" (HVHZ).
2. Product anchors shall be as listed and spaced as shown on details. Anchor embedment to base material shall be beyond wall dressing or stucco.
3. When used in areas requiring wind borne debris protection this product complies with FBC Sections 1609.1.2 & R301.2.1.2 and does not require an impact resistant covering. This product meets missile level "D" and includes Wind Zone 4 as defined in ASTM E1996.
4. For 2x stud framing construction, anchoring of these units shall be the same as that shown for 2x buck masonry construction.
5. Site conditions that deviate from the details of this drawing require further engineering analysis by a licensed engineer or registered architect.

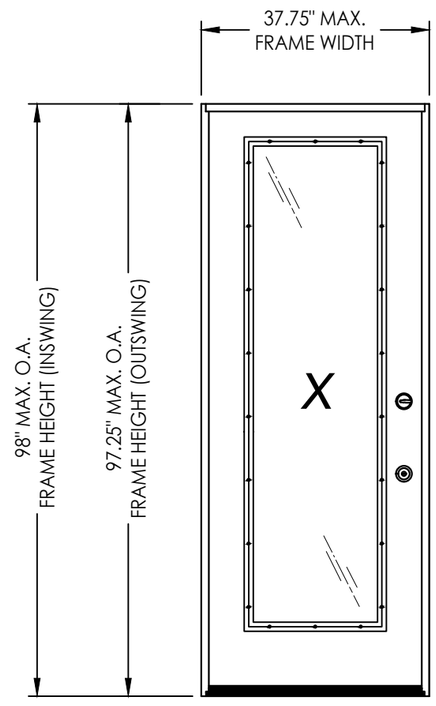

CONFIGURATION	DESIGN PRESSURE (PSF) INSWING		DESIGN PRESSURE (PSF) OUTSWING	
	POSITIVE	NEGATIVE	POSITIVE	NEGATIVE
X	+47.0	-50.0	+47.0	-47.0

TABLE OF CONTENTS

SHEET#	DESCRIPTION
1	Typical Elevations, Design Pressures & General Notes
2	Door Panel Details
3	Elevations
4	Horizontal & Vertical Cross Sections (2X Buck)
5	Horizontal & Vertical Cross Sections (1X Buck)
6	Horizontal & Vertical Cross Sections (Direct to Masonry)
7	Vertical Cross Sections (Thresholds)
8	Buck & Frame Anchoring
9	Hardware Details
10	Glazing Details
11	Components
12	Components & Bill of Materials

Documents Prepared By:
Lyndon F. Schmidt
P.E. No. 43409

RW BUILDING CONSULTANTS, INC.
P.O. Box 230, Valrico, FL 33595
Phone No.: 813.659.9197
FBPE Registry No. 9813

PRODUCT: THERMA-TRU STEEL DOOR

PART OR ASSEMBLY: TYPICAL ELEVATION, DESIGN PRESSURES & GENERAL NOTES

NO.	DATE	REVISIONS	BY
3	7/03/26	UPDATE TO 9TH ED. (2026) FBC	LFS
2	8/07/23	UPDATE TO 8TH ED. (2023) FBC	LFS
1	7/20/20	UPDATE TO 7th ED (2020) FBC	LFS

DATE: 10/12/17
SCALE: N.T.S.
DWG. BY: JK
CHK. BY: LFS
DRAWING NO.: FL-21132.12
SHEET 1 OF 12

© 2017 R.W. Building Consultants Inc.

Z:\2023 FBC Drawings\Therma-Tru\FL-21132 R3\FL-21132.12-14.dwg

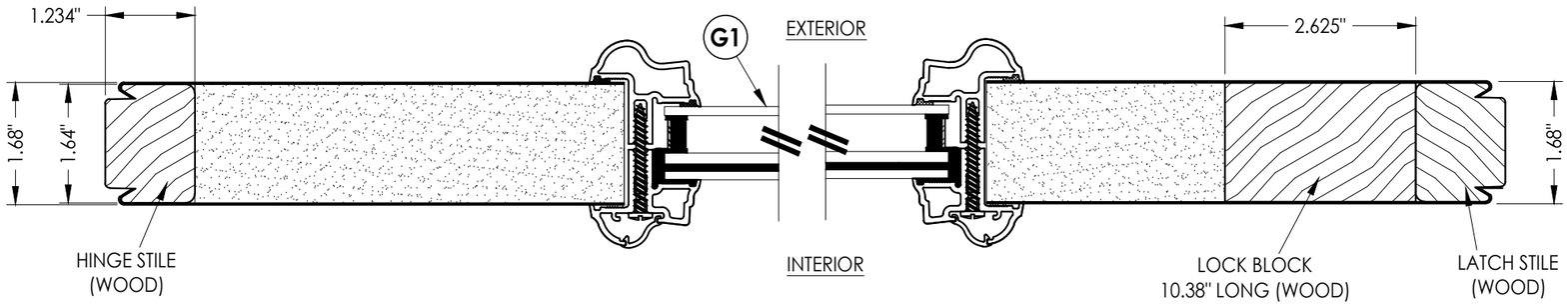

1/2 **HORIZONTAL CROSS SECTION**

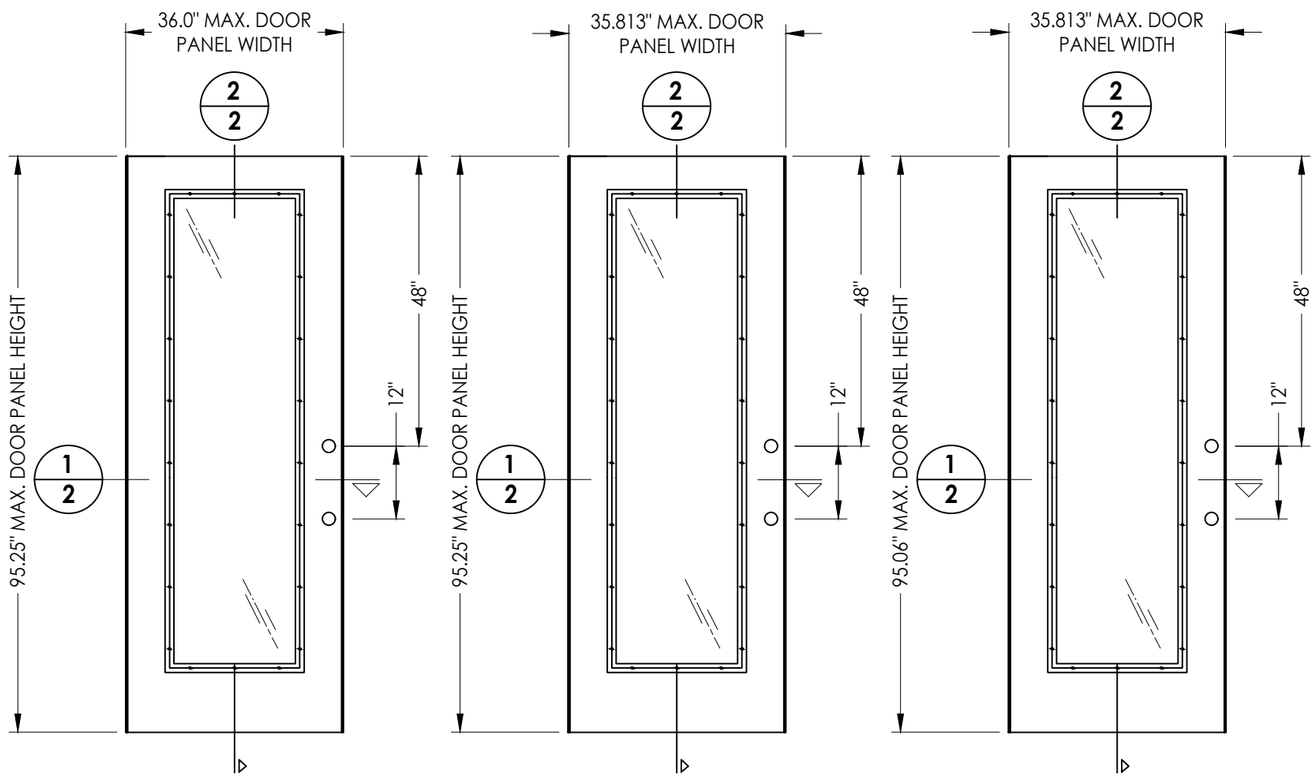

40 **DOOR PANEL**
BOOK

41 **DOOR PANEL**
Hybrid Door

42 **DOOR PANEL**
U1 Door

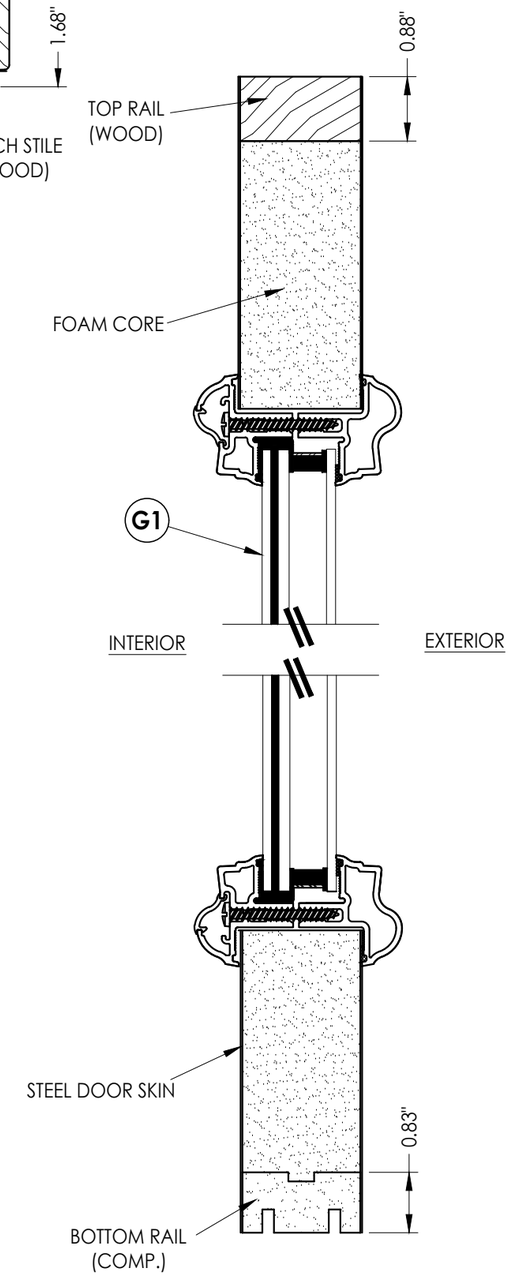

2/2 **VERTICAL CROSS SECTION**

"TRADITIONS" SERIES DOOR PANEL

STEEL DOOR SKIN: 24 GA. (0.022" MIN. THICKNESS, Fy = 48,470 PSI MIN.)
FOAM CORE: POLYURETHANE FOAM (1.9 PCF MIN.)

Documents Prepared By:
Lyndon F. Schmidt
P.E. No. 43409
RW BUILDING CONSULTANTS, INC.
P.O. Box 230, Valrico, FL 33595
Phone No.: 813.659.9197
FBPE Registry No. 9813

PRODUCT: THERMA-TRU STEEL DOOR

PART OR ASSEMBLY: "TRADITIONS" DOOR PANEL DETAILS

REVISIONS

NO.	DATE		BY
3	7/03/26	UPDATE TO 9TH ED. (2026) FBC	LFS
2	8/07/23	UPDATE TO 8TH ED. (2023) FBC	LFS
1	7/20/20	UPDATE TO 7th ED (2020) FBC	LFS

DATE: 10/12/17
SCALE: N.T.S.
DWG. BY: JK
CHK. BY: LFS
DRAWING NO.: FL-21132.12
SHEET 2 OF 12

© 2017 R.W. Building Consultants Inc.

Z:\2023 FBC Drawings\Therma-Tru\FL-21132 R3\FL-21132.12-14.dwg

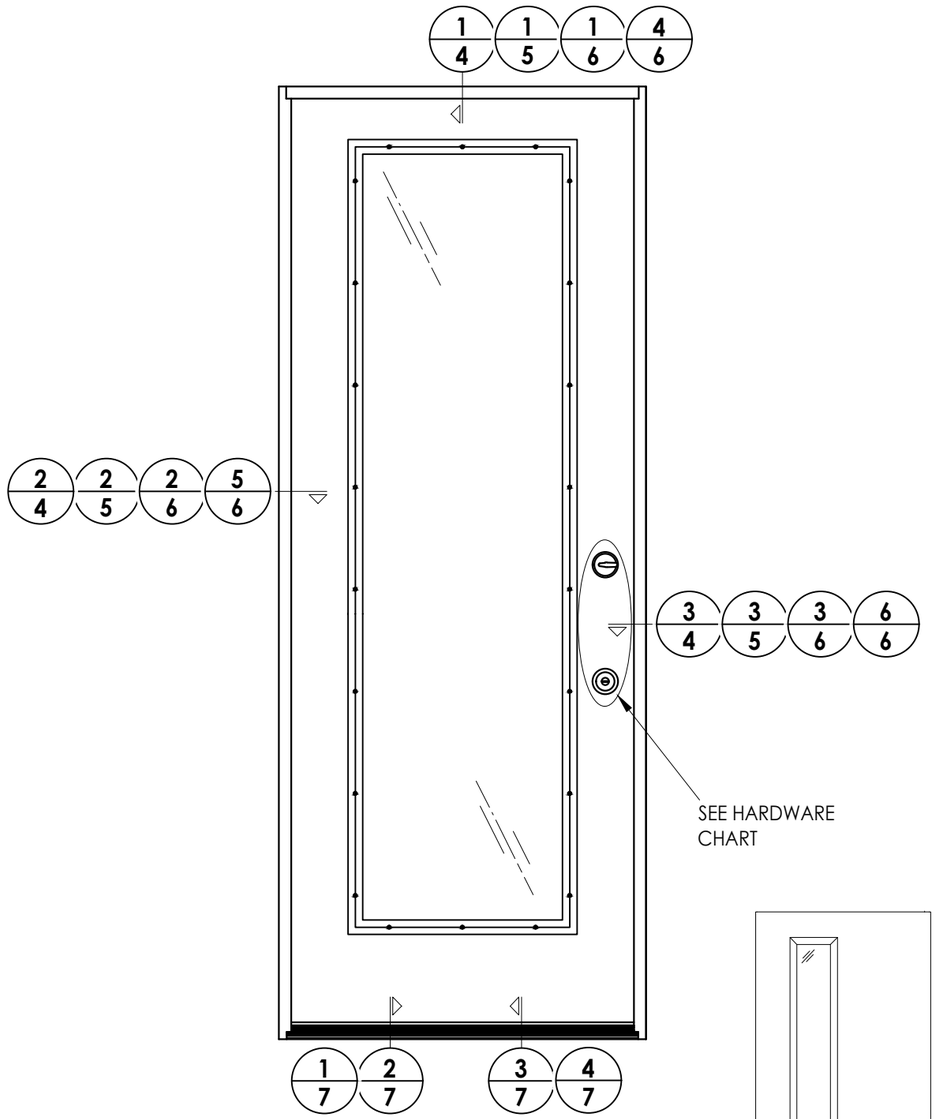

HARDWARE TABLE	
MANUFACTURER	MODEL
SCHLAGE	KNOB: F51 DEADBOLT: B60
KWIKSET	KNOB: SIGNATURE SERIES DEADBOLT: SIGNATURE SERIES (980)

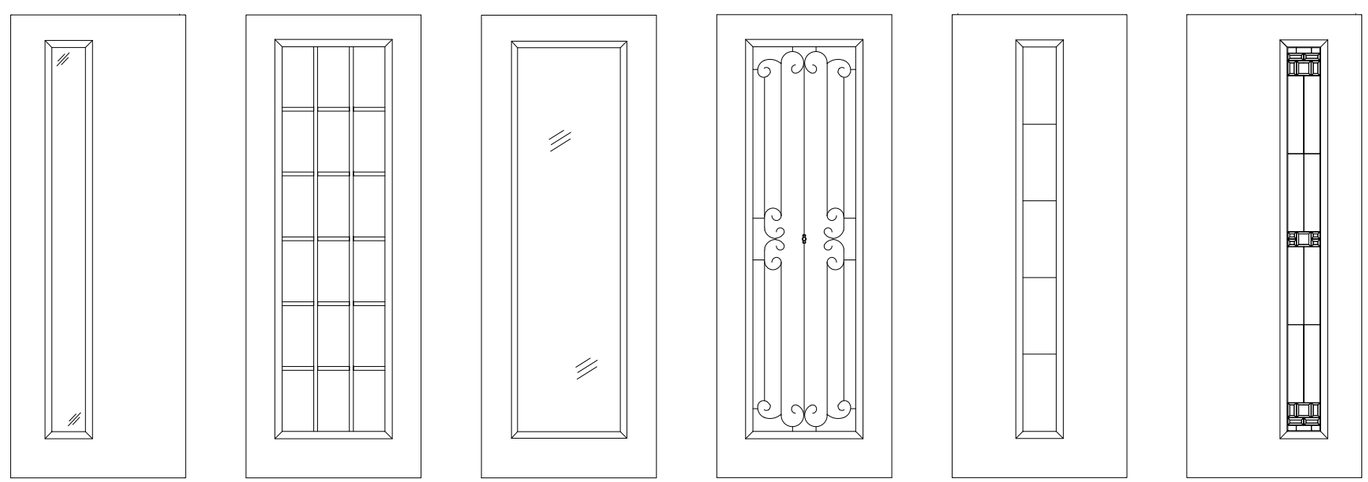

Traditions Door Panel Options

Panel options shown are for illustration and are representative only
(similar glazed panel configurations are allowed)

Documents Prepared By:
Lyndon F. Schmidt
P.E. No. 43409

RW BUILDING CONSULTANTS, INC.
P.O. Box 230, Valrico, FL 33595
Phone No.: 813.659.9197
FBPE Registry No. 9813

PRODUCT: THERMA-TRU STEEL DOOR

PART OR ASSEMBLY: ELEVATIONS

REVISIONS

NO.	DATE		BY
3	7/03/26	UPDATE TO 9TH ED. (2026) FBC	LFS
2	8/07/23	UPDATE TO 8TH ED. (2023) FBC	LFS
1	7/20/20	UPDATE TO 7th ED (2020) FBC	LFS

DATE: 10/12/17
SCALE: N.T.S.
DWG. BY: JK
CHK. BY: LFS
DRAWING NO.: FL-21132.12
SHEET 3 OF 12

© 2017 R.W. Building Consultants Inc.

Z:\2023 FBC Drawings\Therma-Tru\FL-21132 R3\FL-21132.12-14.dwg

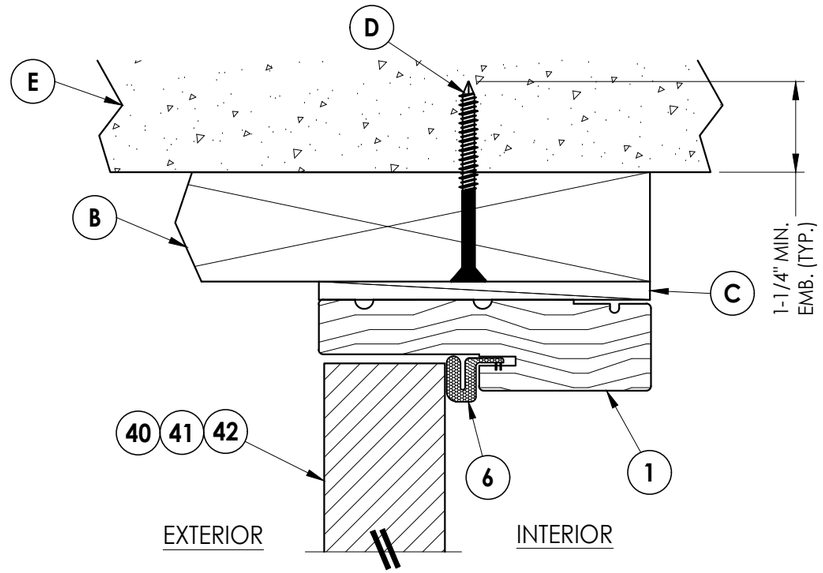

1/4 VERTICAL CROSS SECTION
Shown w/ 2X Buck
Outswing shown (Inswing similar)

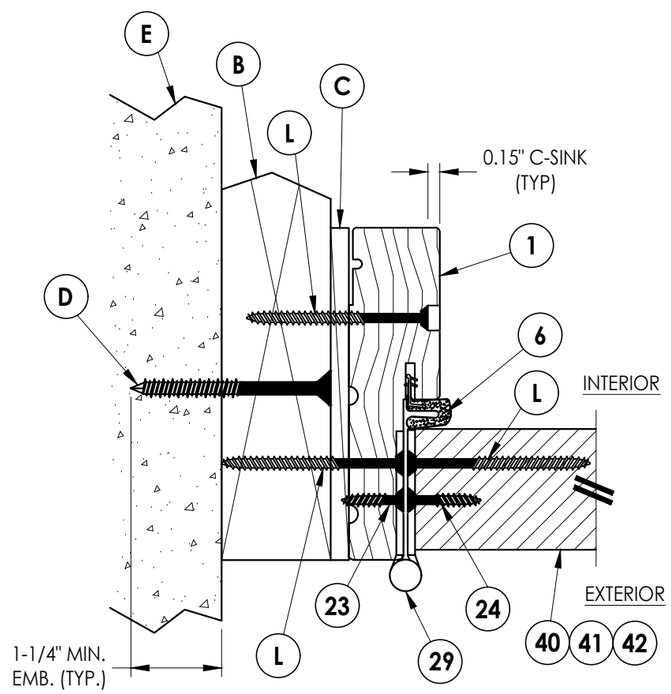

2/4 HORIZONTAL CROSS SECTION
Shown w/ 2X Buck
Outswing shown (Inswing similar)

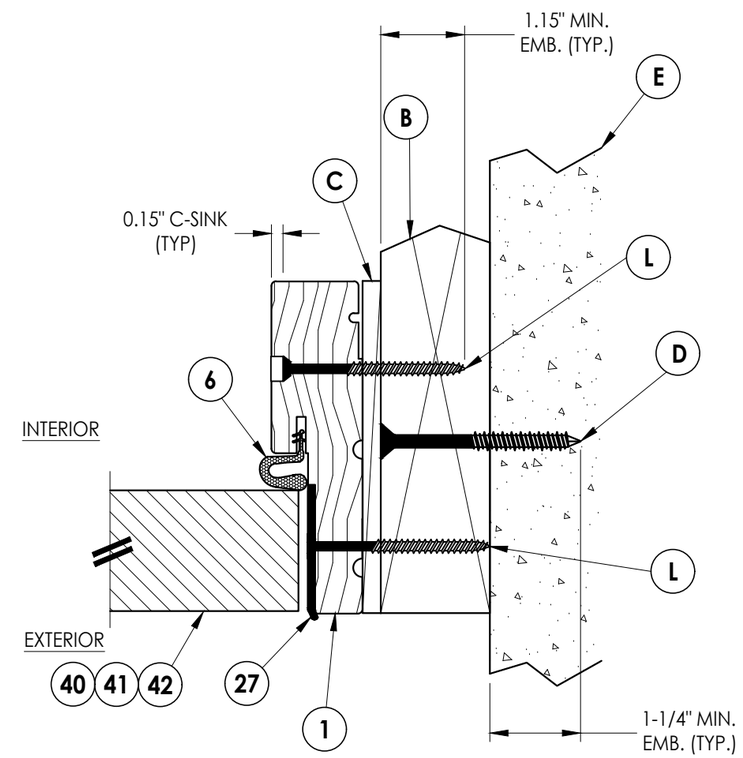

3/4 HORIZONTAL CROSS SECTION
Shown w/ 2X Buck
Outswing shown (Inswing similar)

Documents Prepared By:
Lyndon F. Schmidt
P.E. No. 43409

RW BUILDING CONSULTANTS, INC.
P.O. Box 230, Valrico, FL 33595
Phone No.: 813.659.9197
FBPE Registry No. 9813

PRODUCT: *THERMA–TRU STEEL DOOR*

PART OR ASSEMBLY: *HORIZONTAL & VERTICAL CROSS SECTIONS (2X BUCK)*

REVISIONS

NO.	DATE		BY
3	7/03/26	UPDATE TO 9TH ED. (2026) FBC	LFS
2	8/07/23	UPDATE TO 8TH ED. (2023) FBC	LFS
1	7/20/20	UPDATE TO 7th ED (2020) FBC	LFS

DATE: 10/12/17
SCALE: N.T.S.
DWG. BY: JK
CHK. BY: LFS
DRAWING NO.: FL–21132.12
SHEET 4 OF 12

© 2017 R.W. Building Consultants Inc.

Z:\2023 FBC Drawings\Therma-Tru\FL-21132 R3\FL-21132.12-14.dwg

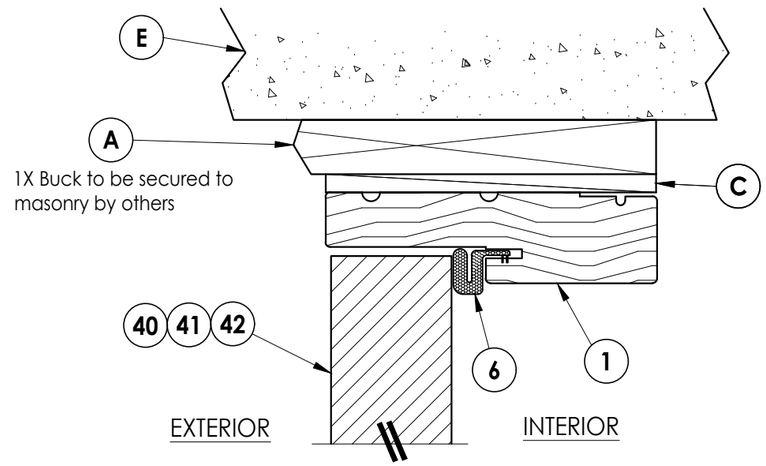

1/5 **VERTICAL CROSS SECTION**
Shown w/ 1X sub-buck
Outswing shown (Inswing similar)

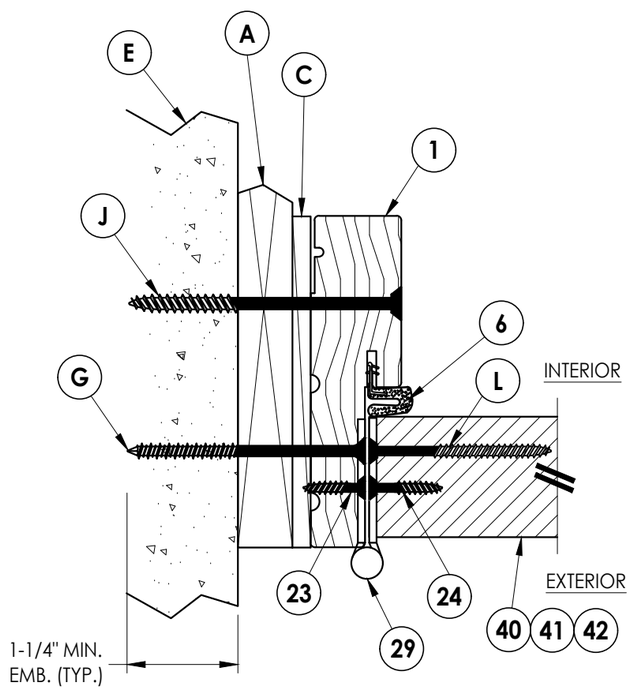

2/5 **HORIZONTAL CROSS SECTION**
Shown w/ 1X sub-buck
Outswing shown (Inswing similar)

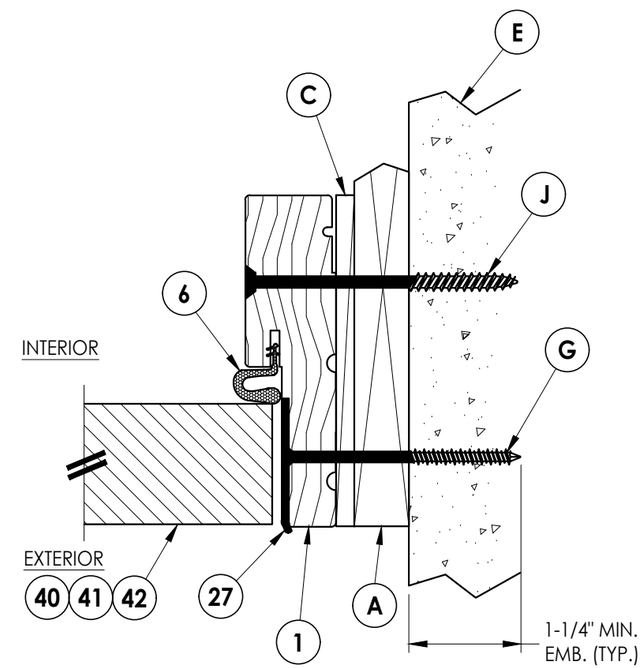

3/5 **HORIZONTAL CROSS SECTION**
Shown w/ 1X sub-buck
Outswing shown (Inswing similar)

Documents Prepared By:
Lyndon F. Schmidt
P.E. No. 43409

BUILDING CONSULTANTS, INC.
P.O. Box 230, Valrico, FL 33595
Phone No.: 813.659.9197
FBPE Registry No. 9813

PRODUCT: *THERMA-TRU STEEL DOOR*

PART OR ASSEMBLY: *HORIZONTAL & VERTICAL CROSS SECTIONS (1X BUCK)*

REVISIONS

NO.	DATE		BY
3	7/03/26	UPDATE TO 9TH ED. (2026) FBC	LFS
2	8/07/23	UPDATE TO 8TH ED. (2023) FBC	LFS
1	7/20/20	UPDATE TO 7th ED (2020) FBC	LFS

DATE: 10/12/17
SCALE: N.T.S.
DWG. BY: JK
CHK. BY: LFS
DRAWING NO.: FL-21132.12
SHEET 5 OF 12

© 2017 R.W. BUILDING CONSULTANTS INC.

Z:\2023 FBC Drawings\Therma-Tru\FL-21132 R3\FL-21132.12-14.dwg

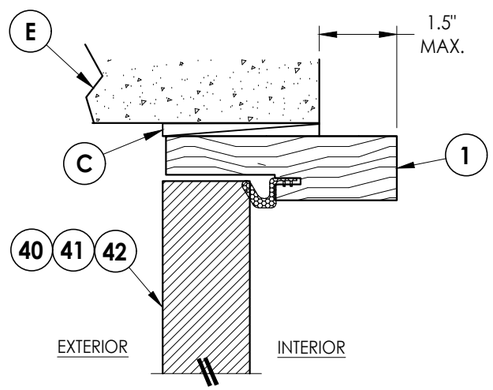

1/6 VERTICAL CROSS SECTION
Shown Direct to Masonry
Outswing only w/ 4-9/16" jamb

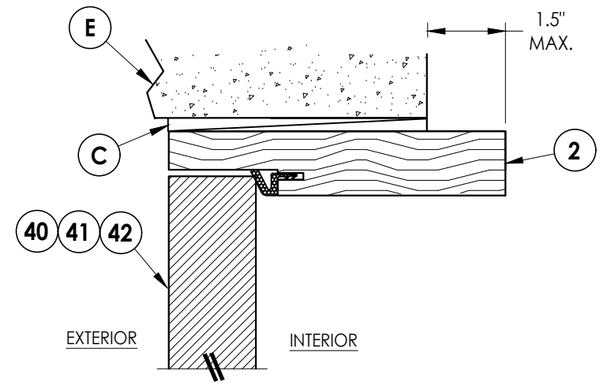

4/6 VERTICAL CROSS SECTION
Shown Direct to Masonry
Outswing only w/ 6-9/16" jamb

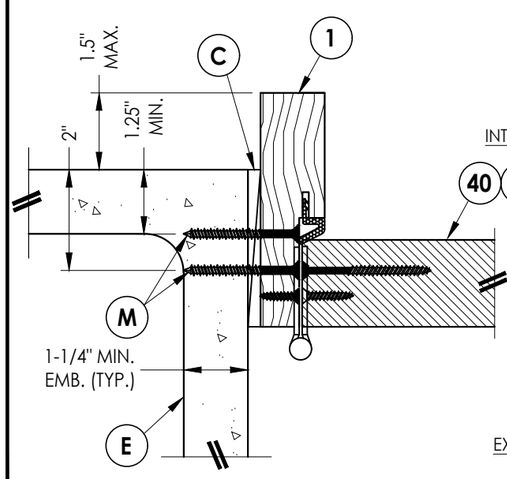

2/6 HORIZONTAL CROSS SECTION
Shown Direct to Masonry
Outswing only w/ 4-9/16" jamb

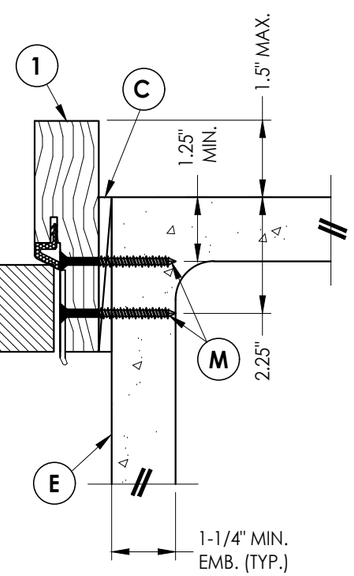

3/6 HORIZONTAL CROSS SECTION
Shown Direct to Masonry
Outswing only w/ 4-9/16" jamb

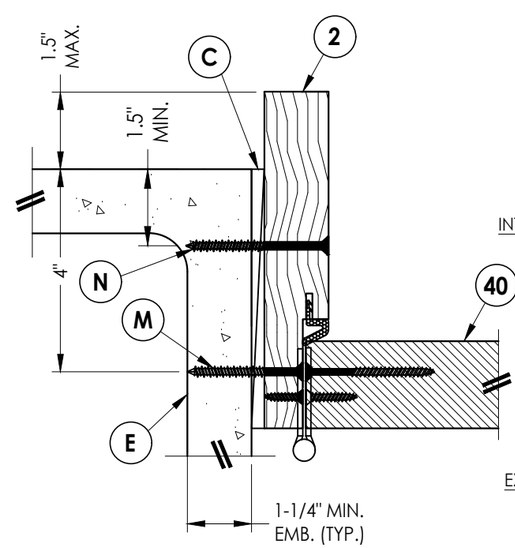

5/6 HORIZONTAL CROSS SECTION
Shown Direct to Masonry
Outswing only w/ 6-9/16" jamb

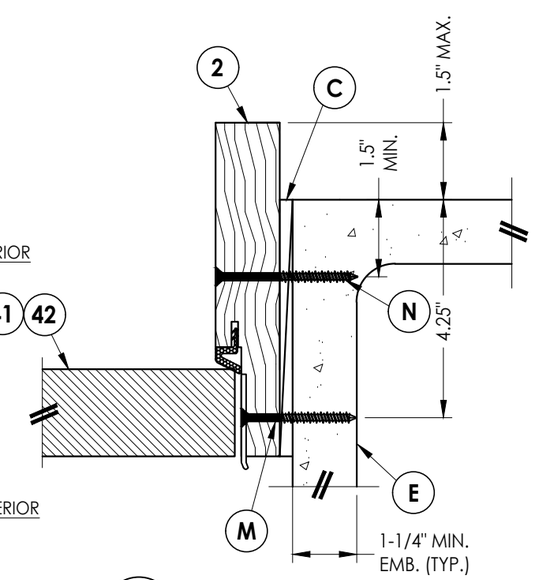

6/6 HORIZONTAL CROSS SECTION
Shown Direct to Masonry
Outswing only w/ 6-9/16" jamb

Z:\2023 FBC Drawings\Therma-Tru\FL-21132 R3\FL-21132.12-14.dwg

Documents Prepared By:
Lyndon F. Schmidt
P.E. No. 43409

RW BUILDING CONSULTANTS, INC.
P.O. Box 230, Valrico, FL 33595
Phone No.: 813.659.9197
Lyndon F. Schmidt, P.E. No. 43409
FBPE Registry No. 26863

PRODUCT: THERMA-TRU STEEL DOOR

PART OR ASSEMBLY: HORIZONTAL & VERTICAL SECTIONS (DIRECT TO MASONRY)

REVISIONS

NO.	DATE		BY
3	7/03/26	UPDATE TO 9TH ED. (2026) FBC	LFS
2	8/07/23	UPDATE TO 8TH ED. (2023) FBC	LFS
1	7/20/20	UPDATE TO 7th ED (2020) FBC	LFS

DATE: 10/12/17
SCALE: N.T.S.
DWG. BY: JK
CHK. BY: LFS
DRAWING NO.: FL-21132.12
SHEET 6 OF 12

© 2017 R.W. BUILDING CONSULTANTS INC.

Notes:
1. Sill Item #'s 16, 32, 33, 36, 37, 38, 39, 43, 44, 45, 46, 47 and 48 are attached to jambs w/ (3) #8 X 2-1/2" pfh screws or (3) 2.5" staples at each end.
2. Sill Item #'s 17 & 18 are attached to jambs w/ (2) #8 X 2-1/2" pfh screws at each end.
3. Sill Item #15 is attached to jambs utilizing (2) #10 X 2" pph SMS screws at each end.

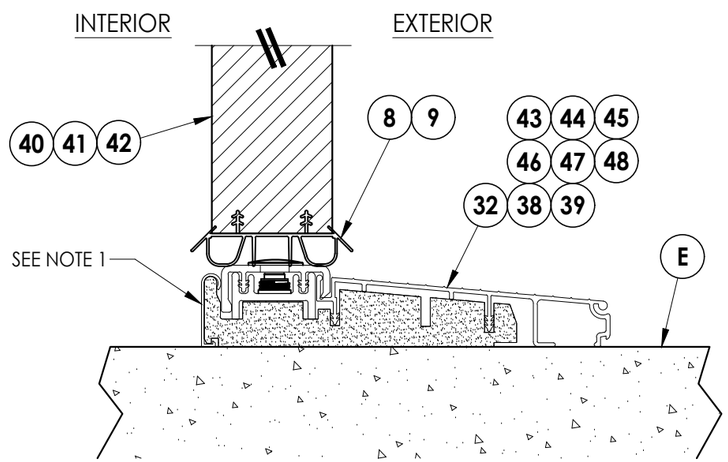

1/7 **VERTICAL CROSS SECTION**
Inswing Sill

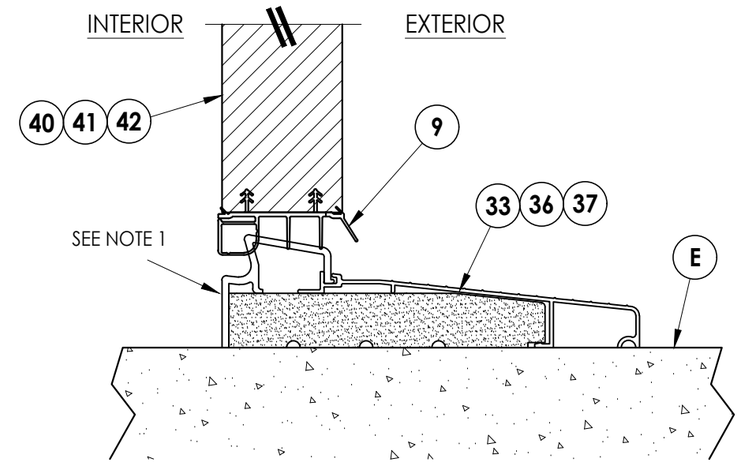

2/7 **VERTICAL CROSS SECTION**
Inswing Sill

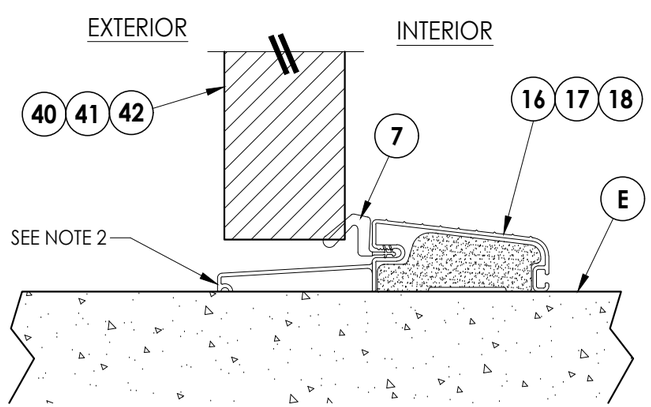

3/7 **VERTICAL CROSS SECTION**
Outswing Sill

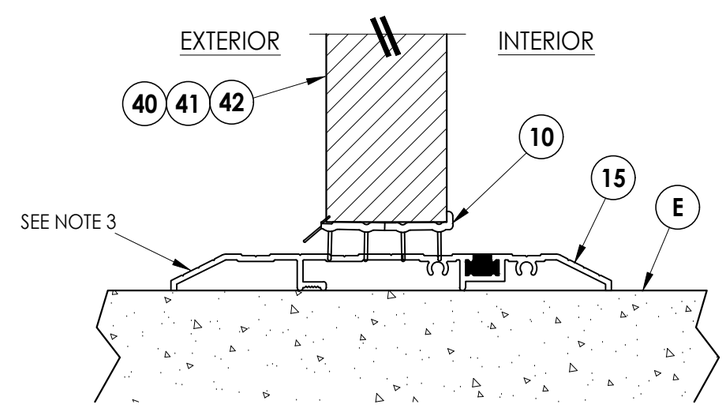

4/7 **VERTICAL CROSS SECTION**
Public Access Sill

Documents Prepared By:
Lyndon F. Schmidt
P.E. No. 43409
BUILDING CONSULTANTS, INC.
P.O. Box 230, Valrico, FL 33595
Phone No.: 813.659.9197
FBPE Registry No. 9813

PRODUCT: THERMA-TRU STEEL DOOR

PART OR ASSEMBLY: VERTICAL CROSS SECTIONS (THRESHOLDS)

REVISIONS

NO.	DATE		BY
3	7/03/26	UPDATE TO 9TH ED. (2026) FBC	LFS
2	8/07/23	UPDATE TO 8TH ED. (2023) FBC	LFS
1	7/20/20	UPDATE TO 7th ED (2020) FBC	LFS

DATE: 10/12/17
SCALE: N.T.S.
DWG. BY: JK
CHK. BY: LFS
DRAWING NO.: FL-21132.12
SHEET 7 OF 12

© 2017 R.W. Building Consultants Inc.

Z:\2023 FBC Drawings\Therma-Tru\FL-21132 R3\FL-21132.12-14.dwg

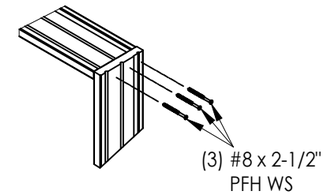

JAMB TO HEAD DETAIL
(TYP.)

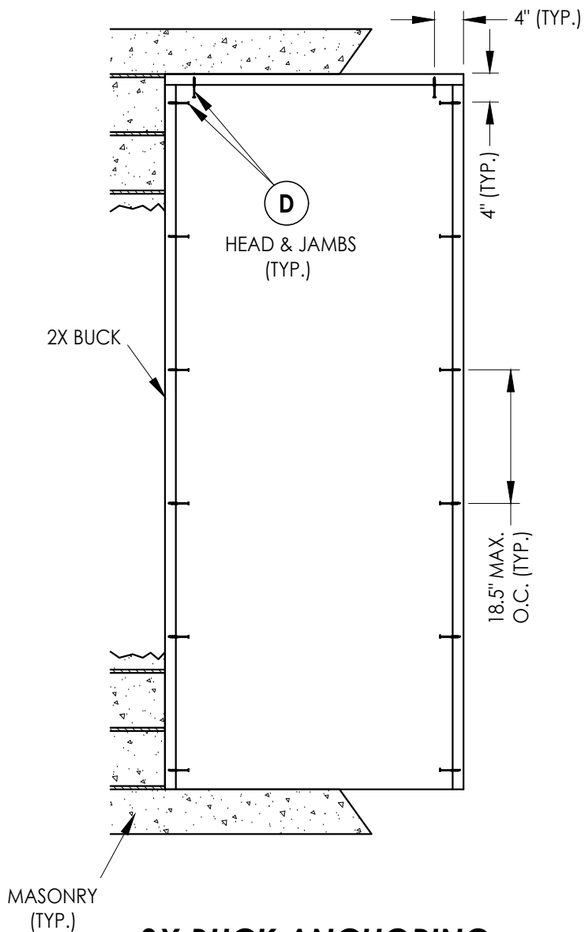

2X BUCK ANCHORING

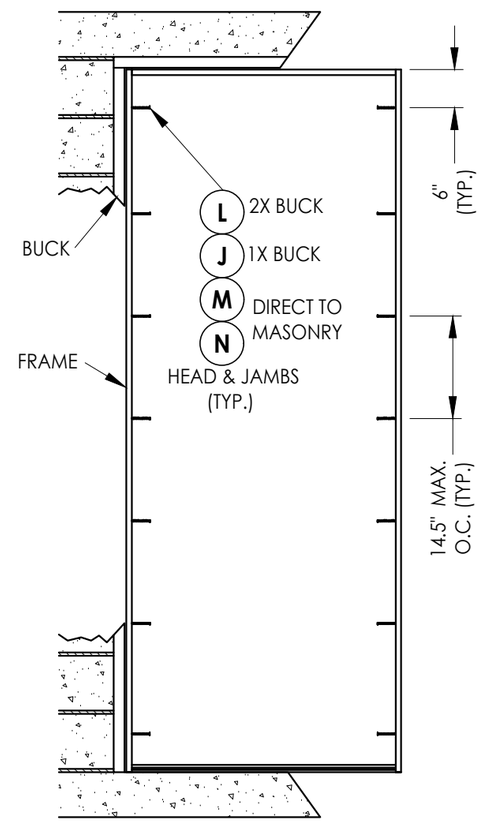

FRAME ANCHORING

Documents Prepared By:
Lyndon F. Schmidt
P.E. No. 43409

RW BUILDING CONSULTANTS, INC.
P.O. Box 230, Valrico, FL 33595
Phone No.: 813.659.9197
FBPE Registry No. 9813

PRODUCT: *THERMA–TRU STEEL DOOR*

PART OR ASSEMBLY: *BUCK AND FRAME ANCHORING*

REVISIONS

NO.	DATE		BY
3	7/03/26	UPDATE TO 9TH ED. (2026) FBC	LFS
2	8/07/23	UPDATE TO 8TH ED. (2023) FBC	LFS
1	7/20/20	UPDATE TO 7th ED (2020) FBC	LFS

DATE: 10/12/17
SCALE: N.T.S.
DWG. BY: JK
CHK. BY: LFS
DRAWING NO.: FL–21132.12
SHEET 8 OF 12

© 2017 R.W. Building Consultants Inc.

Z:\2023 FBC Drawings\Therma-Tru\FL-21132 R3\FL-21132.12-14.dwg

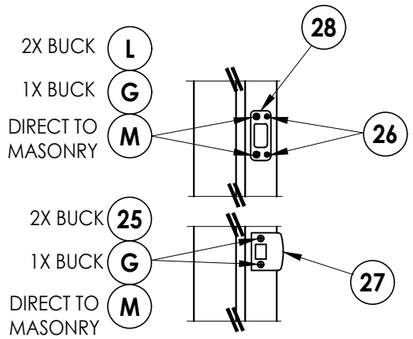

LATCH & DEADBOLT DETAIL
Kwikset

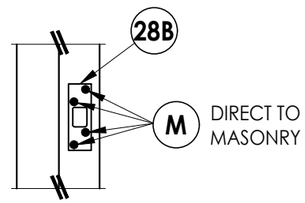

DEADBOLT STRIKE DETAILS
(Security Deadbolt Strike Plate)

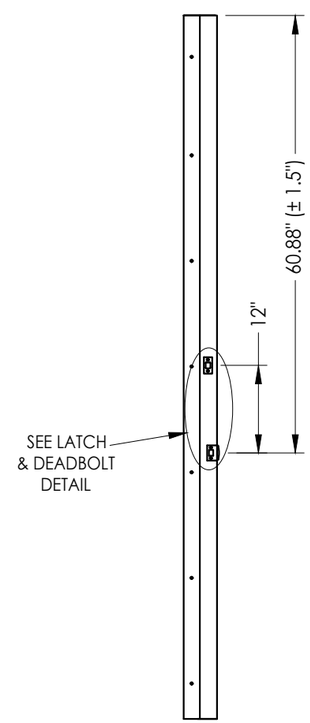

STRIKE JAMB
Latch and Deadbolt

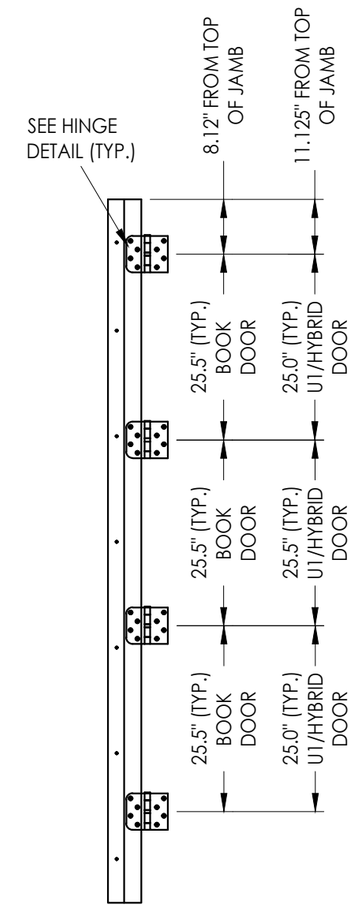

HINGE JAMB

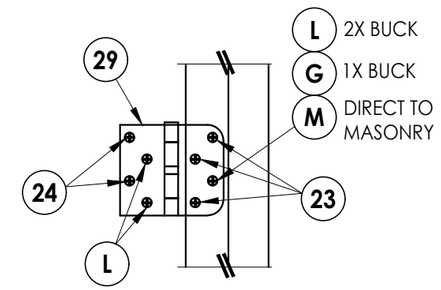

HINGE DETAIL

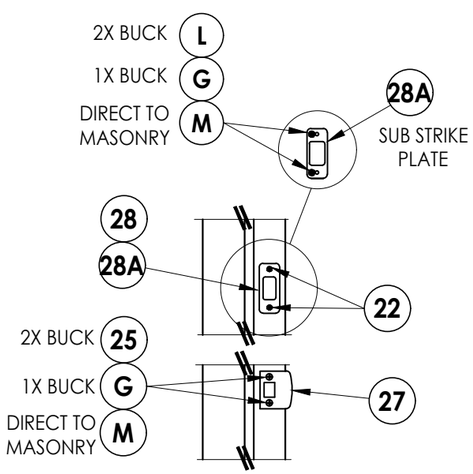

LATCH & DEADBOLT DETAIL
Schlage

LATCH & DEADBOLT STRIKE DETAILS

Documents Prepared By:
Lyndon F. Schmidt
P.E. No. 43409

RW BUILDING CONSULTANTS, INC.
P.O. Box 230, Valrico, FL 33595
Phone No.: 813.659.9197
FBPE Registry No. 9813

PRODUCT: THERMA-TRU STEEL DOOR

PART OR ASSEMBLY: HARDWARE DETAILS

NO.	DATE	REVISIONS	BY
3	7/03/26	UPDATE TO 9TH ED. (2026) FBC	LFS
2	8/07/23	UPDATE TO 8TH ED. (2023) FBC	LFS
1	7/20/20	UPDATE TO 7th ED (2020) FBC	LFS

DATE: 10/12/17
SCALE: N.T.S.
DWG. BY: JK
CHK. BY: LFS
DRAWING NO.: FL-21132.12
SHEET 9 OF 12

© 2017 R.W. Building Consultants Inc.

Z:\2023 FBC Drawings\Therma-Tru\FL-21132 R3\FL-21132.12-14.dwg

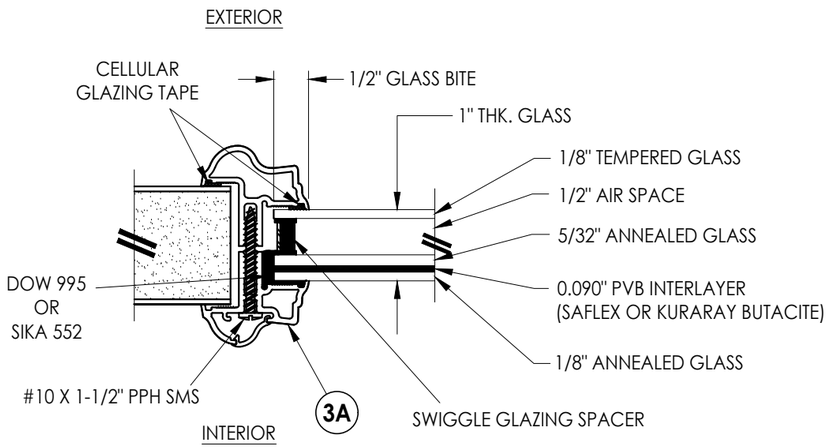

G1 ***GLAZING DETAIL***
Aluminum Impact Lite Frame
Door Panels & Sidelites

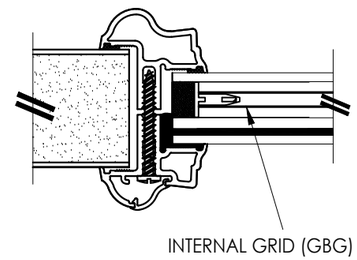

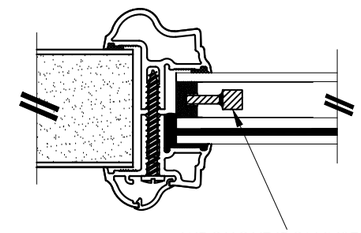

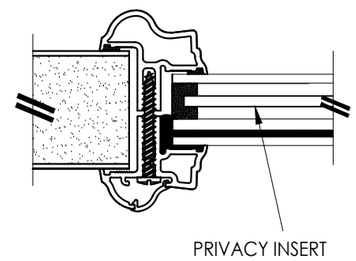

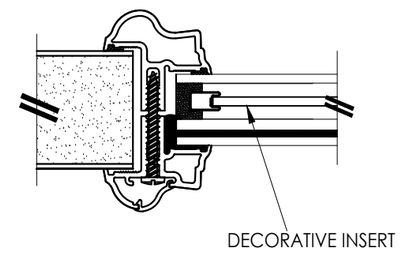

1" LAMINATED INSULATED IMPACT GLASS INSERT OPTIONS

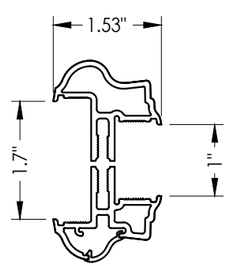

3A ***ALUMINUM FRAME***
Aluminum Impact Lite Frame
Door Panels & Sidelites

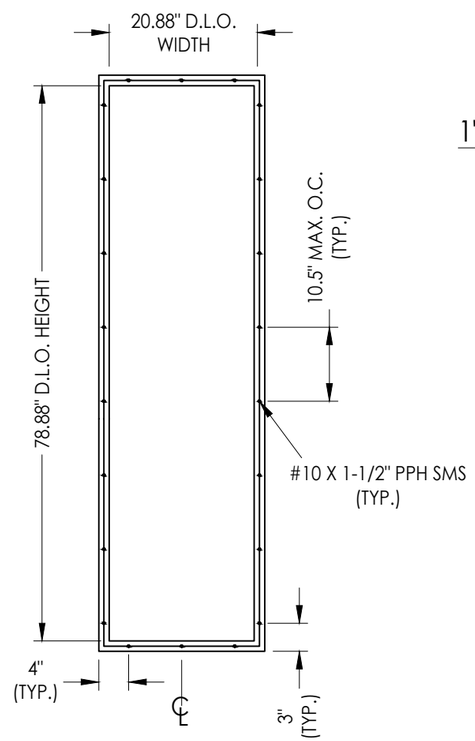

ALUMINUM LITE FRAME

Documents Prepared By:
Lyndon F. Schmidt
P.E. No. 43409
BUILDING CONSULTANTS, INC.
P.O. Box 230, Valrico, FL 33595
Phone No.: 813.659.9197
FBPE Registry No. 9813

PRODUCT: THERMA-TRU STEEL DOOR

PART OR ASSEMBLY: GLAZING DETAILS

NO.	DATE	REVISIONS	BY
3	7/03/26	UPDATE TO 9TH ED. (2026) FBC	LFS
2	8/07/23	UPDATE TO 8TH ED. (2023) FBC	LFS
1	7/20/20	UPDATE TO 7th ED (2020) FBC	LFS

DATE: 8/02/16
SCALE: N.T.S.
DWG. BY: JK
CHK. BY: LFS
DRAWING NO.: FL-21132.12
SHEET 10 OF 12

© 2017 R.W. BUILDING CONSULTANTS INC.

Z:\2023 FBC Drawings\Therma-Tru\FL-21132 R3\FL-21132.12-14.dwg

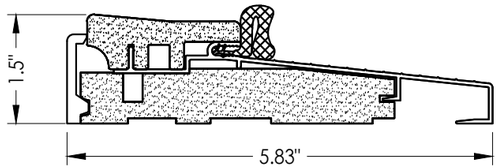

16 ***OUTSWING THRESHOLD***
Composite Sill

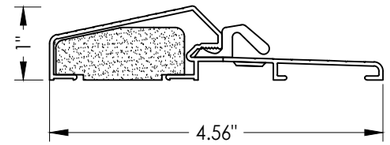

17 ***OUTSWING THRESHOLD***
Composite / Aluminum Sill

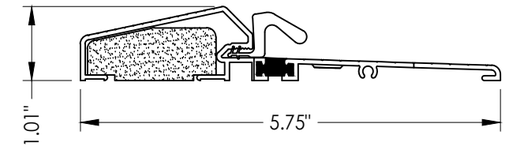

18 ***OUTSWING THRESHOLD***
Composite / Aluminum Sill
(Thermal Break)

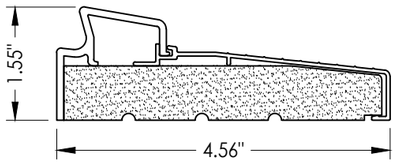

33 ***INSWING THRESHOLD***
Inswing Basic Fixed Sill

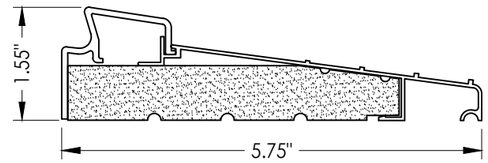

36 ***INSWING THRESHOLD***
Inswing Basic Fixed 5-3/4" Sill

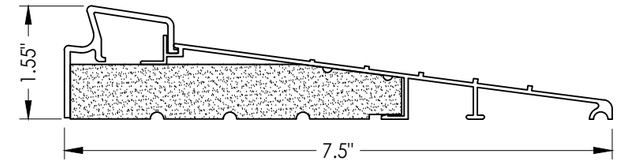

37 ***INSWING THRESHOLD***
Inswing Basic Fixed 7-1/2" Sill

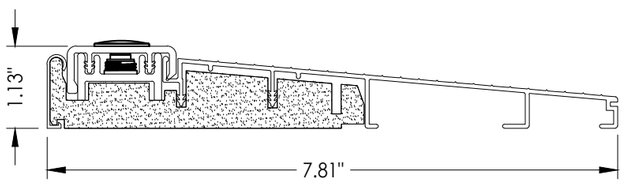

32 ***INSWING THRESHOLD***
Inswing Composite Adjustable 7-3/4" Sill

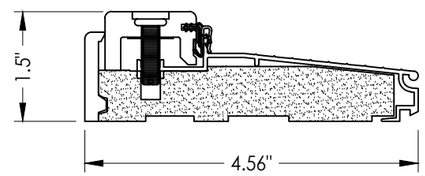

38 ***INSWING THRESHOLD***
Inswing Composite Adjustable Sill

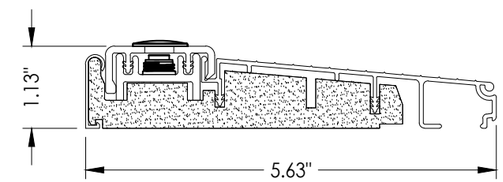

39 ***INSWING THRESHOLD***
Inswing Composite Adjustable Sill

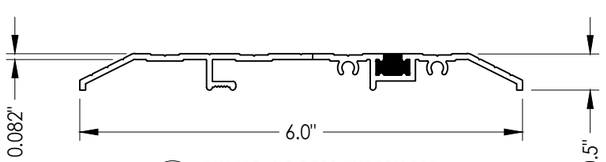

15 ***PUBLIC ACCESS THRESHOLD***

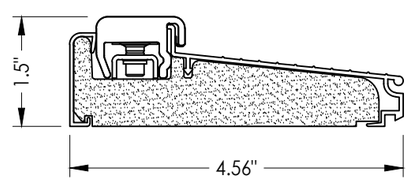

43 ***INSWING THRESHOLD***
Inswing Composite Adjustable Sill
Book, Hybrid

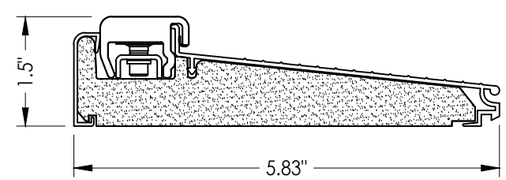

44 ***INSWING THRESHOLD***
Inswing Composite Adjustable Sill
Book, Hybrid

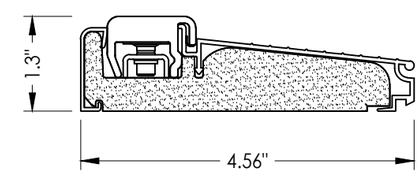

46 ***INSWING THRESHOLD***
Inswing Composite Adjustable Sill
U1

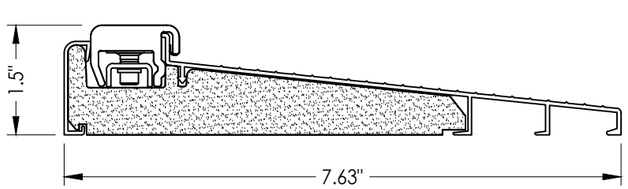

45 ***INSWING THRESHOLD***
Inswing Composite Adjustable Sill
Book, Hybrid

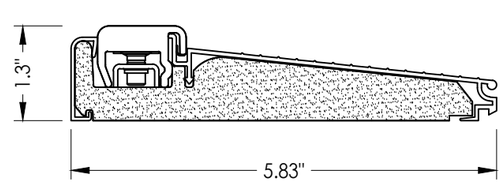

47 ***INSWING THRESHOLD***
Inswing Composite Adjustable Sill
U1

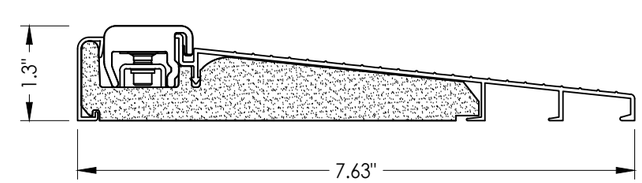

48 ***INSWING THRESHOLD***
Inswing Composite Adjustable Sill
U1

Documents Prepared By:
Lyndon F. Schmidt
P.E. No. 43409

RW BUILDING CONSULTANTS, INC.
P.O. Box 230, Valrico, FL 33595
Phone No.: 813.659.9197
FBPE Registry No. 9813

PRODUCT: *THERMA–TRU STEEL DOOR*

PART OR ASSEMBLY: *COMPONENTS*

REVISIONS

NO.	DATE	BY
3	7/03/26	LFS
2	8/07/23	LFS
1	7/20/20	LFS

UPDATE TO 9TH ED. (2026) FBC
UPDATE TO 8TH ED. (2023) FBC
UPDATE TO 7th ED (2020) FBC

DATE: 10/12/17
SCALE: N.T.S.
DWG. BY: JK
CHK. BY: LFS
DRAWING NO.: FL–21132.12
SHEET 11 OF 12

© 2017 R.W. Building Consultants Inc.

Z:\2023 FBC Drawings\Therma-Tru\FL-21132 R3\FL-21132.12-14.dwg

BILL OF MATERIALS

ITEM #	DESCRIPTION	MATERIAL
A	1X BUCK (SG >= 0.42)	WOOD
B	2X BUCK (SG >= 0.42)	WOOD
C	1/4" MAX. SHIM SPACE	-
D	1/4" X 2-3/4" PFH DeWALT OR ITW CONCRETE SCREW	STEEL
E	MASONRY - 3,000 PSI MIN. CONCRETE CONFORMING TO ACI 301 OR HOLLOW BLOCK CONFORMING TO ASTM C90	CONCRETE
G	3/16" X 3-1/4" ITW CONCRETE SCREW	STEEL
J	1/4" X 3-3/4" PFH DeWALT OR ITW CONCRETE SCREW	STEEL
L	#10 X 2-1/2" PFH WOOD SCREW (1.15" MIN. EMBEDMENT)	STEEL
M	3/16" X 2-1/4" ITW CONCRETE SCREW	STEEL
N	3/16" X 2-3/4" ITW CONCRETE SCREW	STEEL
1	JAMB (FINGER JOINT PINE)	WOOD
2	JAMB (FINGER JOINT PINE)	WOOD
6	WEATHERSTRIP (MEDIUM REACH)	FOAM
7	WEATHERSTRIP (LONG REACH)	FOAM
8	SWEEP	VINYL
9	SWEEP (USE w/ MODERATE CLIMATE THRESHOLD)	VINYL
10	SWEEP (USE w/ PUBLIC ACCESS THRESHOLD)	VINYL
15	PUBLIC ACCESS THRESHOLD	ALUM
16	OUTSWING THRESHOLD	ALUM/COMP
17	OUTSWING THRESHOLD	ALUM/COMP
18	OUTSWING THRESHOLD	ALUM/COMP
22	#8 x 3/4" PFH WOOD SCREW	STEEL
23	#10 x 3/4" PFH WOOD SCREW	STEEL
24	#10 x 1" PFH WOOD SCREW	STEEL

BILL OF MATERIALS

ITEM #	DESCRIPTION	MATERIAL
25	#8 x 2-1/2" PFH WOOD SCREW	STEEL
26	#8 x 5/8" PFH WOOD SCREW	STEEL
27	LATCH STRIKE PLATE	STEEL
28	DEADBOLT STRIKE PLATE (STANDARD)	STEEL
28A	DEADBOLT SUB STRIKE PLATE	STEEL
28B	DEADBOLT STRIKE PLATE (SECURITY)	STEEL
29	4" X 4" HINGE	STEEL
32	INSWING THRESHOLD	ALUM/COMP
33	INSWING THRESHOLD	ALUM/COMP
36	INSWING THRESHOLD	ALUM/COMP
37	INSWING THRESHOLD	ALUM/COMP
38	INSWING THRESHOLD	ALUM/COMP
39	INSWING THRESHOLD	ALUM/COMP
40	DOOR PANEL (BOOK) -"TRADITIONS"	-
41	DOOR PANEL (HYBRID) -"TRADITIONS"	-
42	DOOR PANEL (U1) -"TRADITIONS"	-
43	INSWING THRESHOLD	ALUM/COMP
44	INSWING THRESHOLD	ALUM/COMP
45	INSWING THRESHOLD	ALUM/COMP
46	INSWING THRESHOLD	ALUM/COMP
47	INSWING THRESHOLD	ALUM/COMP
48	INSWING THRESHOLD	ALUM/COMP

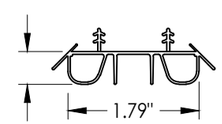

8 SWEEP

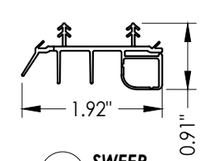

9 SWEEP

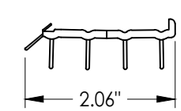

10 SWEEP

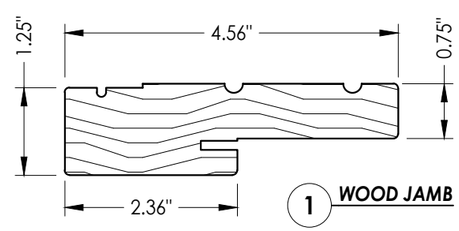

1 WOOD JAMB

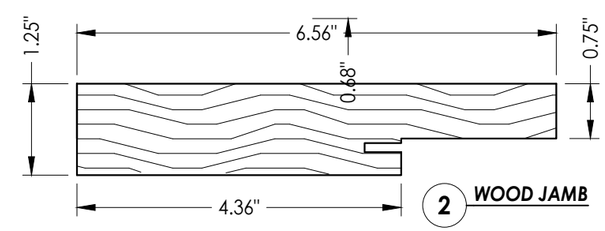

2 WOOD JAMB

CONCRETE ANCHOR NOTES:

1. *Concrete anchor locations at the corners may be adjusted to maintain the min. edge distance to mortar joints.*
2. *Concrete anchor locations noted as "MAX. ON CENTER" must be adjusted to maintain the min. edge distance to mortar joints, additional concrete anchors may be required to ensure the "MAX. ON CENTER" dimension are not exceeded.*
3. *Concrete anchor table:*

ANCHOR TYPE	ANCHOR SIZE	MIN. EMBEDMENT	MIN. CLEARANCE TO MASONRY EDGE	MIN. CLEARANCE TO ADJACENT ANCHOR
ITW TAPCON®	1/4"	1-1/4"	2"	4"
DeWALT ULTRACON+®	1/4"	1-1/4"	1"	4"
ITW TAPCON®	3/16"	1-1/4"	AS SHOWN	1-1/2"

WOOD SCREW INSTALLATION NOTES:

1. *Maintain a minimum 5/8" edge distance, 1" end distance, & 1" o.c. spacing of wood screws to prevent the splitting of wood.*

CORROSION RESISTANCE - SALTWATER ENVIRONMENTS
Fasteners & connectors in areas within 3000 ft (914 m) of a saltwater coastline shall comply with FBC Sections 1711.1 or R332.1.

Documents Prepared By:
Lyndon F. Schmidt
P.E. No. 43409
RW BUILDING CONSULTANTS, INC.
P.O. Box 230, Valrico, FL 33595
Phone No.: 813.659.9197
FBPE Registry No. 9813

PRODUCT: THERMA-TRU STEEL DOOR

PART OR ASSEMBLY: COMPONENTS & BILL OF MATERIALS

NO.	DATE	REVISIONS	BY
3	7/03/26	UPDATE TO 9TH ED. (2026) FBC	LFS
2	8/07/23	UPDATE TO 8TH ED. (2023) FBC	LFS
1	7/20/20	UPDATE TO 7th ED (2020) FBC	LFS

DATE: 10/12/17
SCALE: N.T.S.
DWG. BY: JK
CHK. BY: LFS
DRAWING NO.: FL-21132.12
SHEET 12 OF 12

© 2017 R.W. BUILDING CONSULTANTS INC.

Z:\2023 FBC Drawings\Therma-Tru\FL-21132 R3\FL-21132.12-14.dwg